FEATURES

1. 1A output current
2. Operating temperature range: -40~+105°C
3. Output voltage: 3.3/5/6.5/9/12/15V
4. Switching frequency: 1 MHz
5. Efficiency: up to 92%
6. Soft start
7. Size (9 × 7 × 1.9 mm) - 3.3/5V
8. Size (9 × 7 × 3.1 mm) - 12V

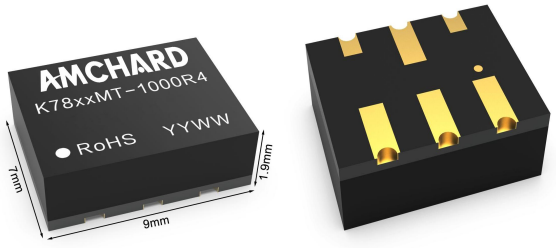

RoHS CE 3 years Warranty

Description

K78xxMT-1000R4 is a DC/DC buck power module with synchronous rectifier control, featuring built-in inductors, power MOSFET, and filter capacitors.K78xxMT-1000R4 delivers a complete power solution that requires minimal external components to achieve 4.5-30V input voltage,with excellent load regulation and linear regulation performance. K78xxMT-1000R4 has a complete protection function, including overcurrent protection (OCP), overvoltage protection (OVP), undervoltage protection (UVP) and overtemperature protection (OTP).K78xxMT-1000R4 minimizes the use of external components and adopts LGA-6(9 × 7 × 1.9 mm) packaging.

Application

- Industrial control
- Medical imaging equipment
- Telecom and network applications
- Linear Voltage Regulator (LDO)
- Miniaturized application scenarios

Typical Application

One 10uFand one 0.1uF ceramic capacitors are integrated in the internal input of the power module, and two 10uF and one 0.1uF ceramic capacitors are added to the output.

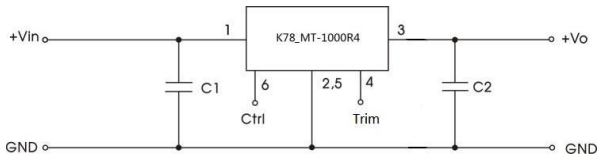

positive output

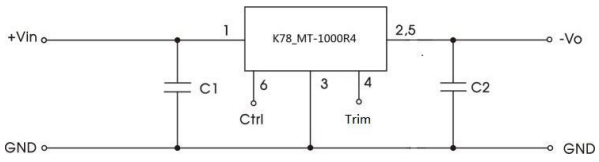

negative output

Selection guide

Product model	Input	Output	Max Vin	Temperature range (shell temperature)	Package
K7803MT-1000R4	4.5~30V	3.3V	32V	-40-105℃	T&R
K7805MT-1000R4	6.5~30V	5V	32V	-40-105℃	T&R
K786.5MT-1000R4☆	TBD	6.5V	TBD	-40-105℃	T&R
K7809MT-1000R4☆	TBD	9V	TBD	-40-105℃	T&R
K78012MT-1000R4	15-36V	12V	45V	-40-105℃	T&R
K78015MT-1000R4☆	TBD	15V	TBD	-40-105℃	T&R

Note:Models marked with an asterisk (*) are currently under development .

Input & Output Specifications

Item	Operating Conditions	Min	Typ.	Max	Unit
Output voltage V_{OUT}		4.95	5.0	5.05	V
Operating temperature range		-40		+105	℃
Storage temperature		-55		+125	℃
Reflow soldering tempera-ture				+245	℃
Input voltage range		4.5		30	V
Quiescent current	V_{IN}=12V,Load=0A		5	10	μA
Switching frequency			1000		KHz
Productiveness	VIN =6.5V，VOUT =5.0V，IOUT=1.0A		92		%
	VIN =24V，VOUT =5.0V，IOUT=1.0A		91		
Maximum duty cycle			80		%
Minimum uptime			50		ns
Soft start time			0.6		ms
Linear adjustment rate	VOUT=5.0V，6.5V < VIN< 18V，ILOAD = 1.2A			±0.5	%
Load regulation	VIN=12V，VOUT=5.0V,0A < ILOAD ≤ 1.2A			±1.5	%
Ripple and noise	VIN = 12V, VOUT = 5.0V, IOUT = 1.2A, Cout = 22μF, 20MHz bandwidth		50	100	mV
Dynamic load response	50-100% ILOAD，di/dt=2A/μS Cout=22 uF		500		mS
Ctrl*	Module on	Ctrl pin float or Ctrl pin pulled high(TTL 1.6~5VDC)			
	Module off	pulled low to GND(-Vo)(0~0.6VDC)			
	Nominal input voltage, input current when off		240		uA
Note: *The positive output ctrl pin voltage is referenced to input GND; Negative output ctrl pin voltage is referenced to -Vo.					

Mechanical Specifications

Dimensions	9mm×7mm×1.9mm
Weight	1.5g(Typ.)/PC
A reel weight	3625g

Note 1: Stress above the values listed in the "Limit" section may cause permanent damage to the device. Excessive exposure time under any absolute maximum rated condition may affect the reliability and service life of the device.

Note 2: The maximum continuous output current may be derated due to the junction temperature of K78xxMT-1000R4.

Typical Characteristic Curve

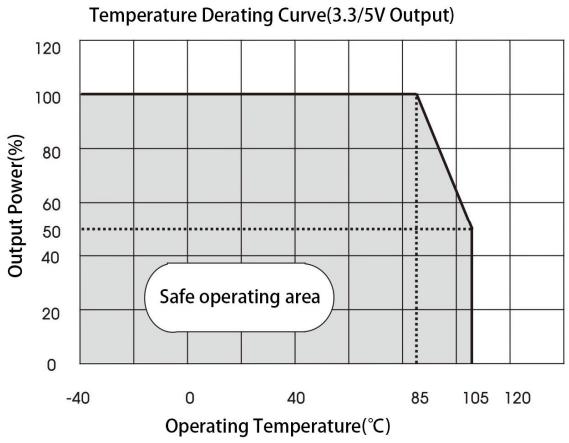

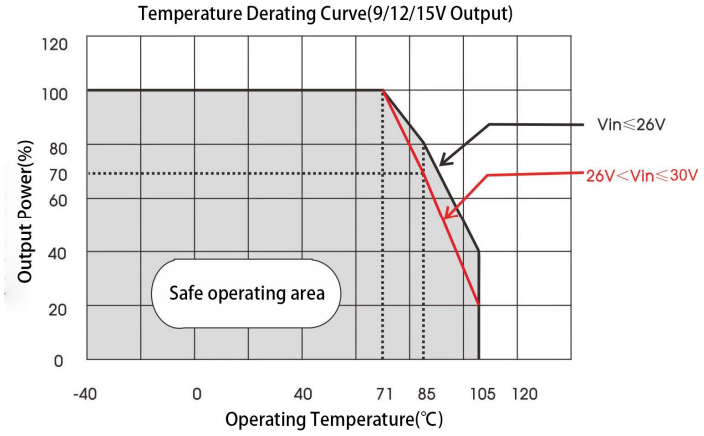

Operational Principle

K78xxMT-1000R4 is a DC/DC buck power module with synchronous rectifier control, featuring integrated inductors, power MOSFET, and filter capacitors.K78xxMT-1000R4 delivers a complete power solution that requires minimal external components to achieve 6.5~30V wide input voltage,1A rated output current, adjustable output voltage, along with excellent load regulation and linear regulation performance.

K78xxMT-1000R4 has a complete protection function, including overcurrent protection (OCP), overvoltage protection (OVP), undervoltage protection (UVP) and overtemperature protection (OTP).K78xxMT-1000R4 minimizes the use of external components and adopts LGA-6(plastic package 9mm× 7mm × 1.9mm) packaging.

Internal Soft Start (SS)

The soft start function prevents overvoltage during module startup. The K78xxMT-1000R4 features a built-in soft start mechanism: When the module starts, its internal circuit generates a ramp-up voltage from 0V to 0.6V(SS). If the SS voltage falls below the internal reference voltage VREF(0.6V), the internal error amplifier uses the SS voltage as the reference. When the SS voltage exceeds the internal reference voltage, the VREF voltage resumes as the control reference. The SS soft start duration is internally configured, typically 0.6ms.

Start and Stop

The module activates when both VIN and VEN exceed their respective thresholds. The internal reference voltage circuit activates first to generate a stable reference voltage, then the internal voltage regulator is enabled. The regulator provides a stable power supply to the remaining circuits.

Three scenarios will deactivate the chip:VIN too low,VEN too low, and over-temperature shutdown protection. During shutdown, the signal loop is first isolated to prevent false triggering. Then the COMP voltage and internal power supply are pulled down. Floating drivers remain unaffected by this shutdown command.

Overcurrent Protection and Short Circuit (OCP)

K78xxMT-1000R4 features per-cycle current limiting protection. When the inductor current peak exceeds the internal peak current limiting threshold, the upper transistor turns off while the lower transistor remains on until the inductor current drops below the internal valley current limiting threshold. The valley current limiting circuit reduces Operating frequency (after triggering the peak current limiting threshold). At the same time, the output voltage continues to drop until VFB is below the under-voltage (UV) threshold (typically 42%).

Once UV is triggered,K78xxMT-1000R4 enters hiccups protection mode, periodically restarting the module. This protection mode is useful when the output is short-circuited to ground, greatly reducing the average short-circuit current, reducing thermal problems, and protecting the module.

Once the overcurrent condition disappears,K78xxMT-1000R4 will exit the hiccup protection mode.

Over temperature turn off protection (OTP)

To prevent any damage caused by overheating, the K78xxMT-1000R4 stops switching when the internal chip temperature exceeds 150 ° C. Once the temperature is below the threshold (130 ° C typical value), the module resumes operation.

Undervoltage lockout protection (UVLO)

Undervoltage Lockout Protection (UVLO) allows the mod- ule to stop operating when the input voltage is insufficient. The K780xxMT-1000R4 Undervoltage Lockout Protection (UVLO) comparator monitors the output voltage of the internal LDO (VCC). The typical threshold for the rise of Undervoltage Lockout Protection (UVLO) is 4.3 V, while the typical threshold for its fall is 3.85 V.

Error amplifier (EA)

K78xxMT-1000R4 uses a dynamic transconductance amplif - ier as the error amplifier (OTA). The error amplifier compares the FB voltage with the internal 0.6V reference voltage (VREF) and outputs a current proportional to the difference between them. This output current then charges or discharges the internal compensation network to form the COMP voltage, which controls the power MOSFET current. The optimized internal compensation network minimizes the number of external components used, greatly simplifying the design of the control loop.

Operational principle

The use of Trim and the calculation of Trim resistance

1.Positive output application: connect trim resistor to GND/Vo respectively for adjusting up/down.
2.Negative output application: connect trim resistor to GND/Vo- respectively for adjusting up/down

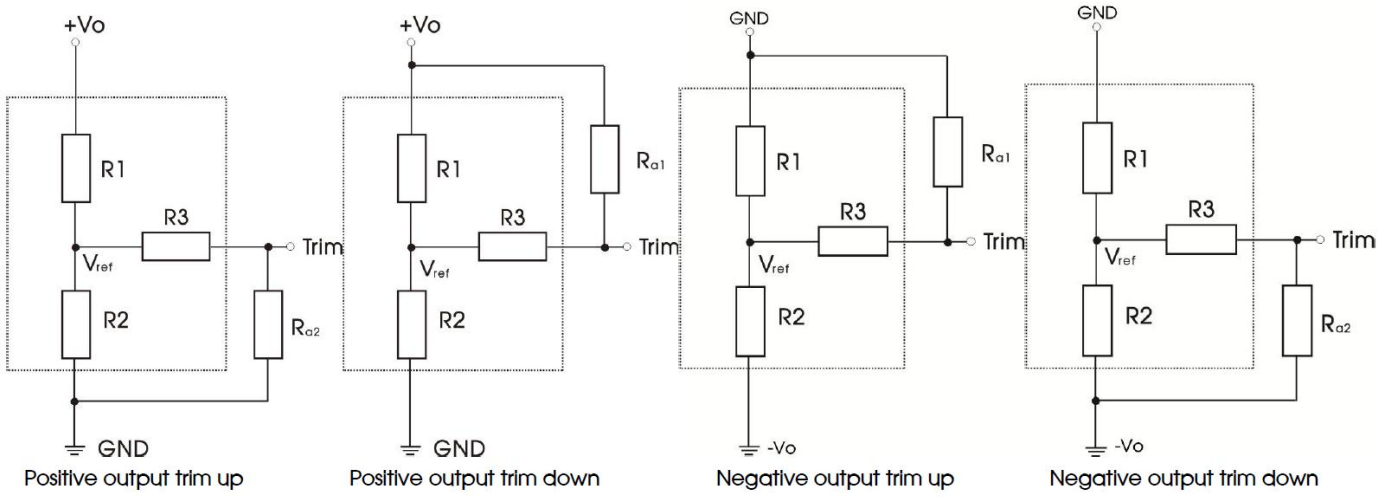

Fig.4 Circuit diagram of Trim up and down (dashed line shows internal part of module)

Calculating Trim resistor values:

Trim up : $R_{a2}=\frac{aR_2}{R_2-a}-R_3,\quad a=R_2//(R_3+R_{a2})=\frac{V_{ref}}{V_o'-V_{ref}}R_1$

Trim down : $R_{a1}=\frac{aR_1}{R_1-a}-R_3,\quad a=R_1//(R_3+R_{a1})=\frac{V_o'-V_{ref}}{V_{ref}}R_2$

Vout(V)	R1(KΩ)	R2(KΩ)	R3(KΩ)	Vref(V)
3.3	150	33	180	0.6
5	100	13.66	82	0.6
6.5	32.4	3.3	20	0.6
9	100	7.14	47	0.6
12	100	5.28	43	0.6
15	180	7.5	51	0.6

Table:

Vout nom.	±3.3VDC		±5.0VDC		±6.5VDC		±9.0VDC		±12VDC		±15VDC	
Vout Trim.	Ra1 (KΩ)	Ra2 (KΩ)	Ra1 (KΩ)	Ra2 (KΩ)	Ra1 (KΩ)	Ra2 (KΩ)	Ra1 (KΩ)	Ra2 (KΩ)	Ra1 (KΩ)	Ra2 (KΩ)	Ra1 (KΩ)	Ra2 (KΩ)
2.97	815	-	-	-	-	-	-	-	-	-	-	-
3.63	-	117.3	-	-	-	-	-	-	-	-	-	-
4.5	-	-	710	-	-	-	-	-	-	-	-	-
5.5	-	-	-	36.2	-	-	-	-	-	-	-	-
5.85	-	-	-		245.4	-	-	-	-	-	-	-
7.15	-	-	-	-	-	9.5	-	-	-	-	-	-
8.1	-	-	-	-	-	-	783.2	-	-	-	-	-
9.9	-	-	-	-	-	-	-	19.9	-	-	-	-
10.8	-	-	-	-	-	-	-	-	382.2	-	-	-
13.2	-	-	-	-	-	-	-	-	-	5.5	-	-
13.5	-	-	-	-	-	-	-	-	-	-	509.6	-
16.5	-	-	-	-	-	-	-	-	-	-	-	21

Dimension

LGA package with 6 pins (9mm×7mm×1.9mm)

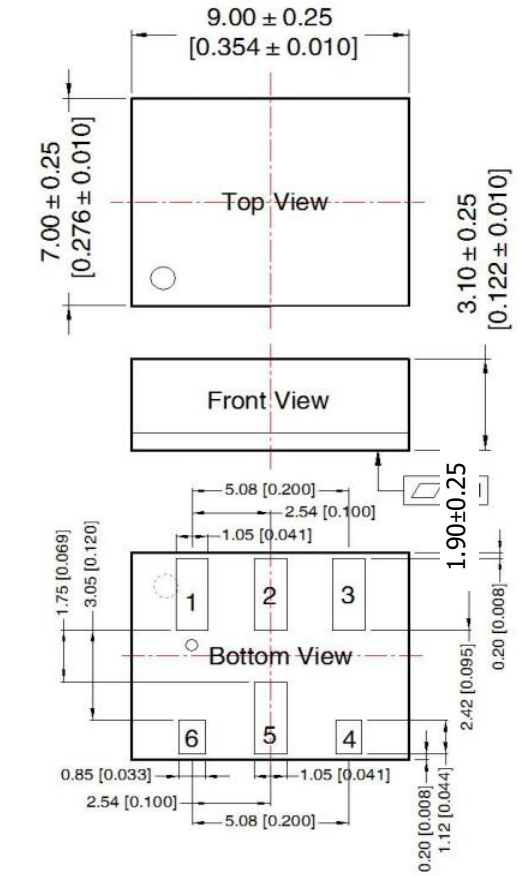

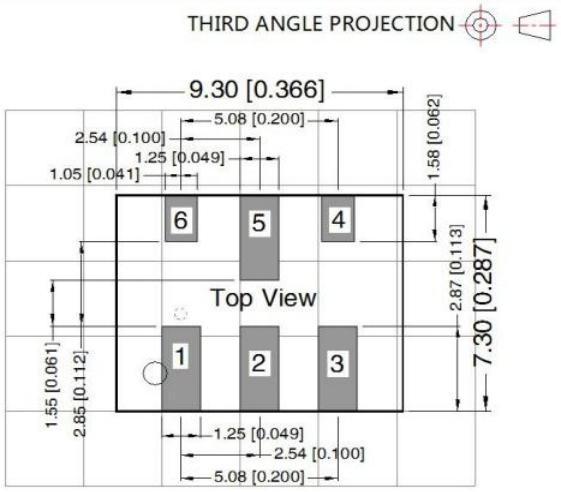

Note: Grid 2.54*2.54mm

Pin–Out		
Pin	Positive output	Negative output
1	+Vin	+Vin
2	GND	–Vo
3	+Vo	GND
4	Trim	Trim
5	GND	–Vo
6	Ctrl	Ctrl

Note:
Unit: mm[inch]
Pin diameter tolerances: ± 0.10[± 0.004]

Carrier Tape Packaging Diagram

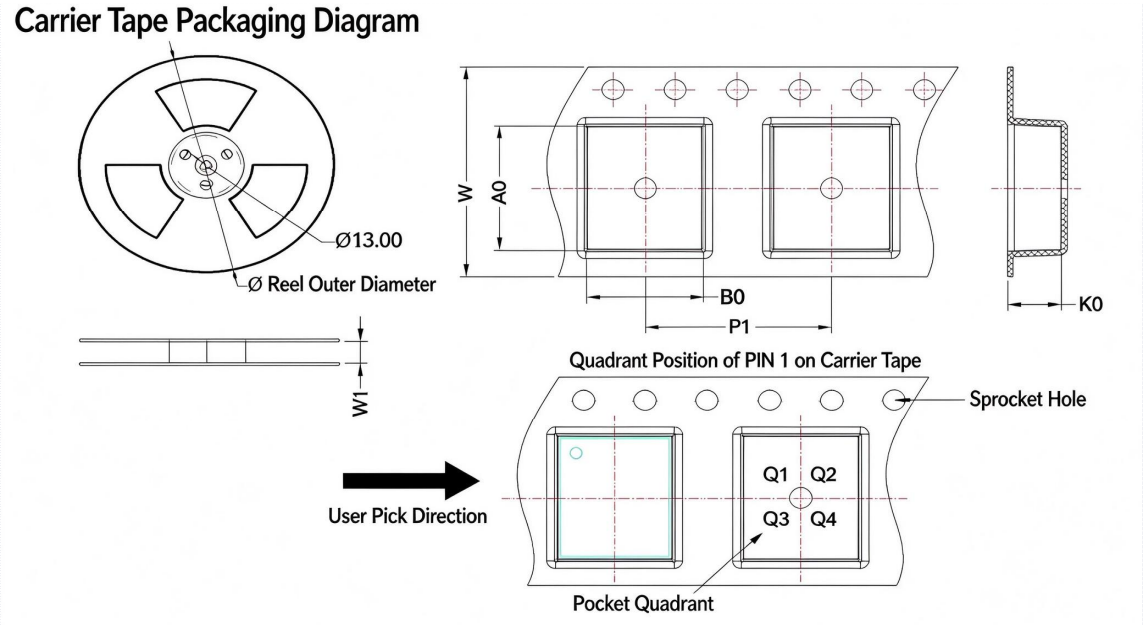

Device Model	Package Type	PIN	MPQ	Reel Outer Diameter (mm)	Reel Width W1 (mm)	A0 (mm)	B0 (mm)	K0 (mm)	P1 (mm)	W (mm)	PIN 1 Quadrant
K78xxMT-1000R4	LGA-6	6	2000	330	25	9.39	7.38	2.26	12	24	Q1

Precautions for Welding and Storage

Recommended reflow soldering curve

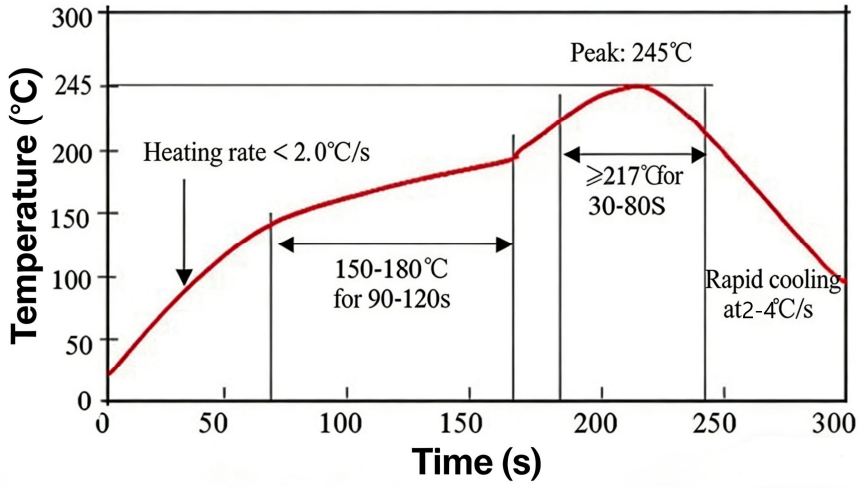

Note: Due to the large size of the module, do not place it on the board base during reflow soldering to avoid dropping.

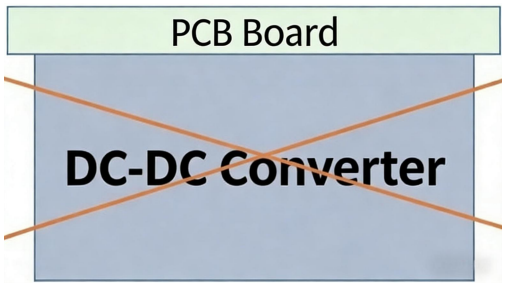

2、 Use the package immediately after opening. If not fully used, vacuum-seal it and store in a dry chamber to prevent moisture from causing module malfunctions during reflow soldering.

3、 The module uses tin soldering. Strictly control the reflow soldering temperature below 245℃ to prevent internal solder melting and potential failures.

4、 Do not use a hot air gun during welding. Instead, employ reflow soldering or a repair station.

Notes:

1. If the product works under the minimum required load, it cannot guarantee that the performance of the product complies with all the performance indicators in this manual;
2. The maximum capacitive load is tested under the input voltage range and full load condition;
3. Unless otherwise stated, all indexes in this manual are measured at Ta=25℃, humidity <75%RH, nominal input voltage and rated output load;
4. All index testing methods in this manual are based on the enterprise standards of the company;
5. Our company can provide product customization, specific needs can directly contact our technical staff;
6.AMCHARD reserves the right to make changes to the product at any time without notice.