Product Feature



1. Fully domestic components
2. Ultra-wide input voltage range (2:1)
3. Efficiency up to 93%
4. No-load power consumption as low as 0.2 W
5. Isolation voltage 1600 VDC
6. Input undervoltage protection; output short-circuit, overcurrent, and overvoltage protection
7. Operating temperature range: -40°C to +105°C
8. Meets UL62368/EN62368/BS EN62368 standards

RoHS CE 3 years Warranty

The GTB_LD-72WR3 series has an output power of 72 W, a 2:1 ultra-wide input voltage range, efficiency up to 93%, and an operating temperature range of -40°C to +105°C. It provides input undervoltage protection and output short-circuit, overcurrent, and overvoltage protection, and is widely used in industrial control, power, instrumentation, communications, railway, and other fields

Selection Guide

Product Model	Input Voltage (VDC)		Output		Full-Load Efficiency (%) Min./Typ.	Max. Capacitive Load (μF)
	Input Voltage (VDC) Nominal (Range)	Input Voltage (VDC) Max.	Output Voltage (VDC)	Output Current (mA) Max./Min.		
GTB2412LD-72WR3	18–36	40	12	6000/300	90/92	6000
GTB2415LD-72WR3			15	4800/240	90/92	4000
GTB2424LD-72WR3			24	3000/150	91/93	2000

Notes:
1. The input voltage must not exceed the "maximum value"; otherwise, permanent and unrecoverable damage may occur.
2. The above efficiency values are measured at nominal input voltage and rated output load.

Basic Characteristics

Item	Operating Conditions	Min.	Typ.	Max.	Unit
Input filter type	—	Pi type			
Input voltage range	GTB_LD-72WR3(H)G series	18	24	36	VDC
Input startup voltage	GTB_LD-72WR3(H) series	—	—	18	VDC
Startup time	Nominal input voltage and constant resistive load	—	10	150	ms
Switching frequency	100% load, nominal input voltage	—	370	—	kHz
Output ripple & noise	20 MHz bandwidth, 5%–100% load, parallel-wire test method	—	180	300	mVp-p
ON/OFF Ctrl	Power module ON	Ctrl floating or connected to TTL high level (3–12 VDC)			
	Power module OFF	Ctrl connected to GND or low level (0–1.2 VDC)			
	Input current when power module is OFF	—	4	10	mA

Input Specifications

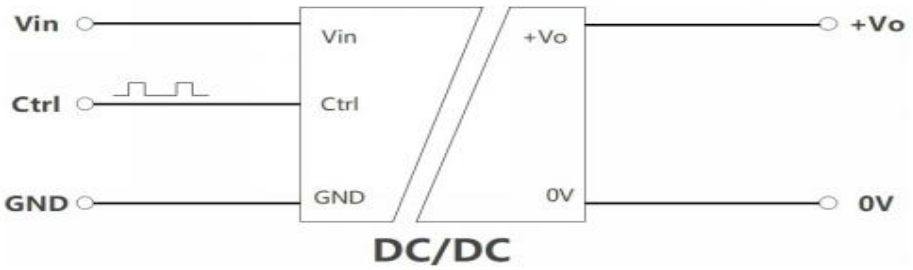

Note: The voltage at the Ctrl pin is referenced to the input pin GND. Do not apply more than 12 V to the Ctrl input to avoid damaging the power module.

GTB2415LD-72WR3

Efficiency vs. Input Voltage (Full Load)

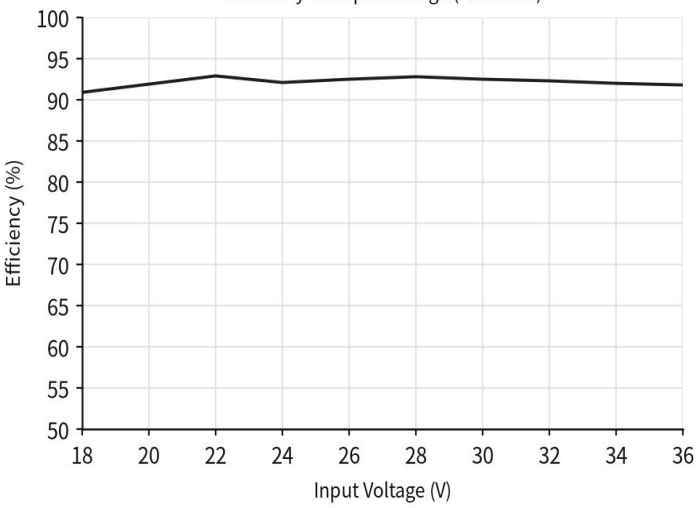

GTB2415LD-72WR3

Efficiency vs. Output Load (Vin=24V)

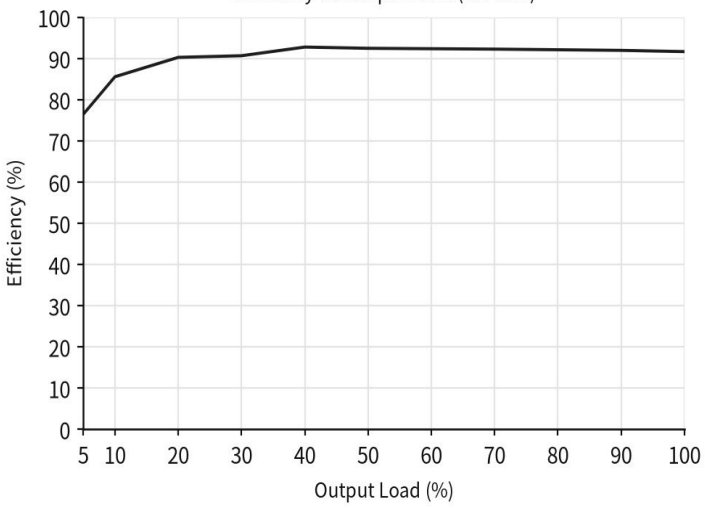

Adjustment Characteristics

Item	Operating Conditions	Min.	Typ.	Max.	Unit
Output voltage accuracy	—	—	±1	±3	%
Line regulation	Full load, input voltage from low to high	—	±0.2	±0.5	%
Load regulation	Nominal input, 5%–100% load	—	±0.5	±1	%
Transient recovery time	25% load step change, nominal input voltage	—	300	500	μs
Transient response deviation	25% load step change, nominal	—	±3	±5	%

Protection Functions

Item	Operating Conditions		Min.	Typ.	Max.	Unit
Isolation voltage	Input-output, test leakage current <1 mA	Input-output (single output)	1600	—	—	VDC
		Input-case	1000	—	—	VDC
		Output-case	1000	—	—	VDC

Protection Functions

Item	Operating Conditions	Min.	Typ.	Max.	Unit
Insulation resistance	Input-output, insulation voltage 500 VDC	100M	—	—	Ω
Isolation capacitance	Input-output, 100 kHz/0.1 V	—	2200	—	pF
Insulation grade	—	Functional insulation			
Input surge voltage	GTB_LD-72WR3(H)G series (1 sec max.)	-0.7	—	50	VDC
Hot plug	—	Not supported			
Output short-circuit protection	—	Hiccup mode, continuous, self-recovery			
Output overcurrent protection	Hiccup mode	105	—	180	%Io
Output overvoltage protection	Input voltage range	110	—	160	%Vo
Output voltage adjustable Trim	Input voltage range	90	—	110	%Vo

Trim Application Circuit Diagram

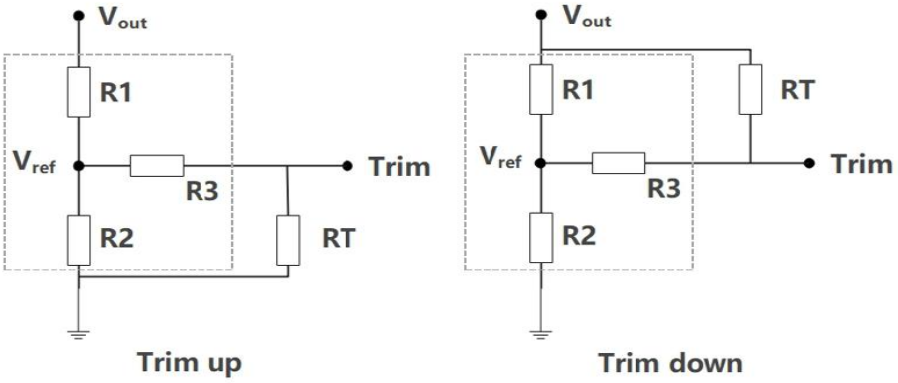

RT calculation formulas:

Up:

$$R_T = \frac{\beta * R_2}{R_2 - \beta} - R_3 \qquad \beta = \frac{V_{ref}}{V_{out} - V_{ref}} * R_1$$

Down:

$$R_T = \frac{\beta * R_1}{R_1 - \beta} - R_3 \qquad \beta = \frac{V_{out} - V_{ref}}{V_{ref}} * R_2$$

Vout (V)	R1 (kΩ)	R2 (kΩ)	R3 (kΩ)	Vref (V)
12	11	2.87	15	2.5
15	14.494	2.87	15	2.5
24	24.872	2.87	15	2.5

Note: RT is the Trim adjustment resistor; the dashed box shows the internal equivalent parameters of the product; β is a calculation parameter and has no practical meaning.

Environmental Characteristics

Item	Operating Conditions	Min.	Typ.	Max.	Unit
Operating temperature	Temperature derating curve	-40	—	105	℃
Pin soldering temperature	Solder joint 1.5 mm from case, 10 seconds	—	—	300	℃
Temperature drift coefficient	Full load	—	±0.02	—	%/℃
Storage humidity	Non-condensing	5	—	95	%RH
Vibration	—	10–55 Hz, 5 G, 30 min. along X, Y and Z			
Storage temperature	—	-55	—	125	℃
Storage humidity	Non-condensing	5	—	95	%RH
MTBF	MIL-HDBK-217F, 25℃	1000	—	—	k hours
MTBF	MIL-HDBK-217F, 85℃	500	—	—	k hours

Temperature Derating Curve

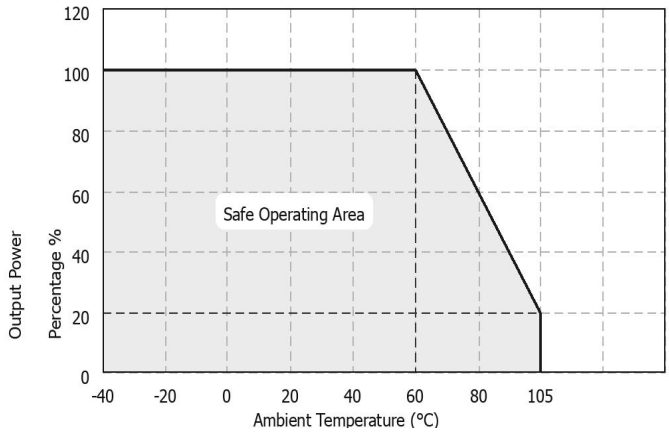

Note: Test PCB: 160x50mm, 2oz, 4-layer board.

All DC/DC power modules in this series are tested with the typical application circuit before shipment.

If further reduction of input/output ripple is required, filter capacitors can be connected at the input and output. The application circuit is shown in the figure below.

When selecting the filter capacitors, the capacitance should be smaller than the module's maximum capacitive load; otherwise the module may fail to start. For any output, the recommended external capacitance values under safe and reliable operating conditions are given in the table below.

Typical Circuit Design and Application

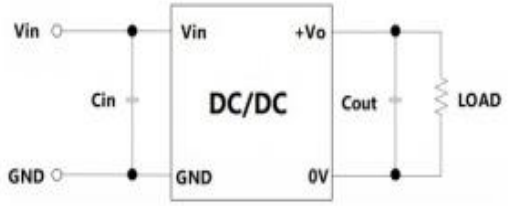

Typical Application Circuit			
Vin (VDC)	**Cin**	**Vo (VDC)**	**Cout**
24	100 μF/50 V	12/15/24	100 μF/50 V

EMC Characteristics

Category	Item	Condition / Standard	Result
EMI	Conducted disturbance	See EMC recommended peripheral circuit	CISPR32/EN55032 CLASS B
EMI	Radiated disturbance	See EMC recommended peripheral circuit	CISPR32/EN55032 CLASS B
EMS	Electrostatic discharge	Contact ±6 kV, Air ±8 kV	EN61000-4-2, perf. Criteria B
EMS	Radiated immunity	10 V/m	EN61000-4-3, Criteria A
EMS	Burst immunity	±2 kV (see EMC recommended peripheral circuit)	EN61000-4-4, Criteria B
EMS	Surge immunity	±2 kV (see EMC recommended peripheral circuit)	EN61000-4-5, Criteria B
EMS	Conducted disturbance immunity	10 Vr.m.s	EN61000-4-6, Criteria A
EMS	Voltage dips, dropouts, and short-time interruption immunity	0%, 70%	EN61000-4-29, Criteria B

EMC Recommended Peripheral Circuit

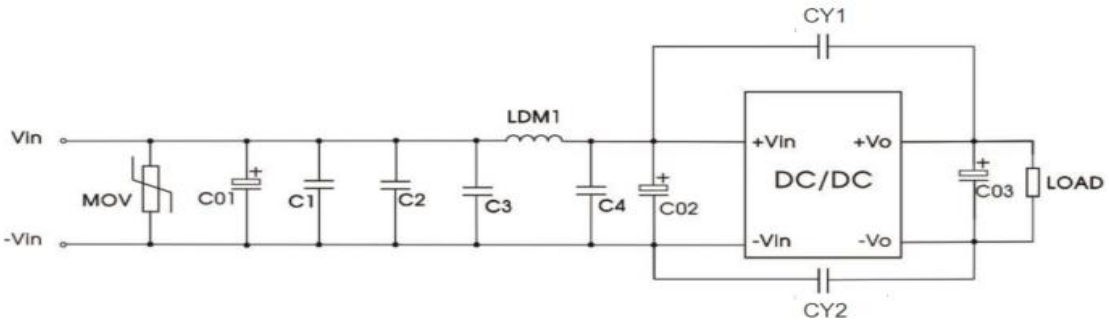

Figure 1 Recommended EMI CLASS A Circuit Applicable models: GTB2412LD-72WR3(H)G

Figure 3 Peripheral Parameter Recommendation Table								
Model	**MOV**	**C01**	**C02**	**C03**	**C1/C2**	**C3/C4**	**LDM1**	**CY1/CY2**
GTB2412LD-72WR3(H)G	14D470K	680 uF/50V	330 uF/50V	100uF/100 V	4.7 uF/50V	10 uF/50V	2.2 uH	2.2 nF

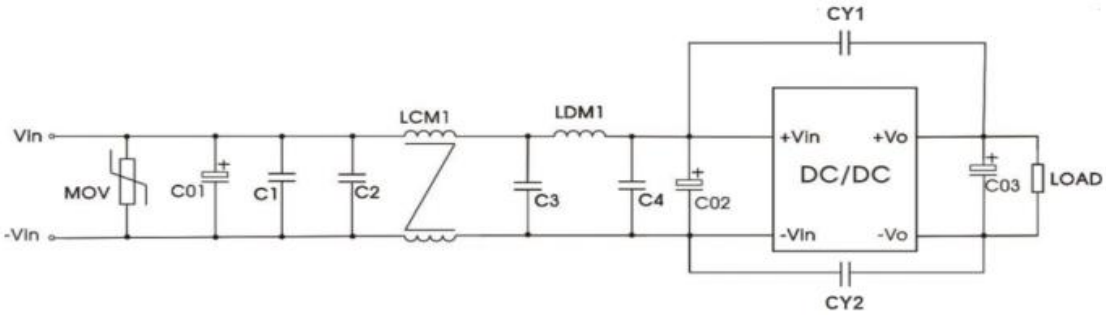

Figure 2 Recommended EMI CLASS B, EFT, Surge Circuit Applicable model: GTB2412LD-72WR3(H)G

Figure 3 Peripheral Parameter Recommendation Table								
Model	**MOV**	**C01**	**C02**	**C03**	**C1/C2**	**C3/C4**	**LDM1**	**CY1/CY2**
GTB2412LD-72WR3(H)G	14D470K	680 uF/50V	330 uF/50V	100uF/100 V	4.7 uF/50V	10 uF/50V	2.2 uH	2.2 nF

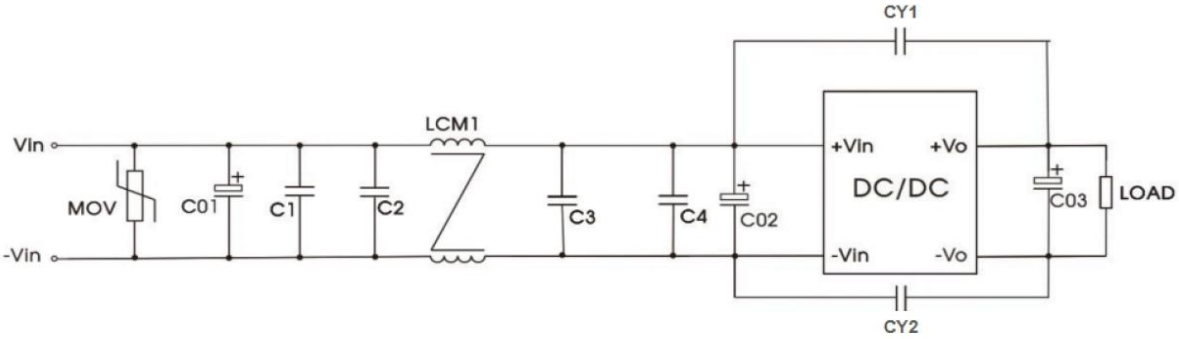

Figure 3 Recommended Circuit for Conducted and Radiated CLASS A Emissions Applicable model: GTB2412LD-72WR3(H)G

Figure 4 Peripheral Parameter Recommendation Table									
Model	**MOV**	**C01**	**C02**	**C03**	**C1/C2**	**C3/C4**	**LCM1/2**	**CY1/CY2**	**C04/C05**
GTB2424LD-72WR(H)G	14D470K	680 μF/50 V	330 μF/50 V	100 μF/100 V	4.7 μF/50 V	10μF/50V	10 nH	2.2 nF	—

EMC Recommended Peripheral Circuit

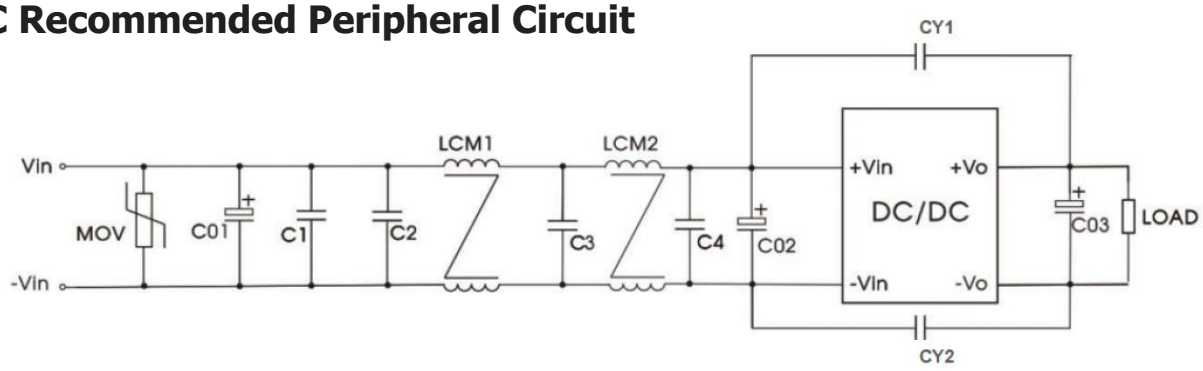

Figure 4 Recommended EMS and Conducted/Radiated CLASS B Circuit Applicable model: GTB2424LD-72WR3(H)G

Figure 4 Peripheral Parameter Recommendation Table									
Model	**MOV**	**C01**	**C02**	**C03**	**C1/C2**	**C3/C4**	**LCM1/2**	**CY1/CY2**	**C04/C05**
GTB2424LD72WR3(H)G	14D470K	680 μF/50 V	330 μF/50 V	100 μF/100 V	4.7 μF/50 V	C3: 10 μF/50 V C4: 47 μF/50 V	10 nH	2.2 nF	—

Physical Characteristics

Material	Case	Aluminum alloy
	Potting compound	Epoxy resin (UL94 V-0)
Dimensions (L × W × H)	GTB_LD-72WR3 G series	50.80 × 25.40 × 11.80 mm
Dimensions (L × W × H)	GTB_LD-72WR3 HGwith heatsink series	51.40 × 26.20 × 16.50 mm
Weight	GTB_LD-72WR3G series	40.0 g (Typ.)
	GTB_LD-72WR3 HG with heatsink series	50.0 g (Typ.)

GTB_LD-72WR3 Outline Dimension Drawing

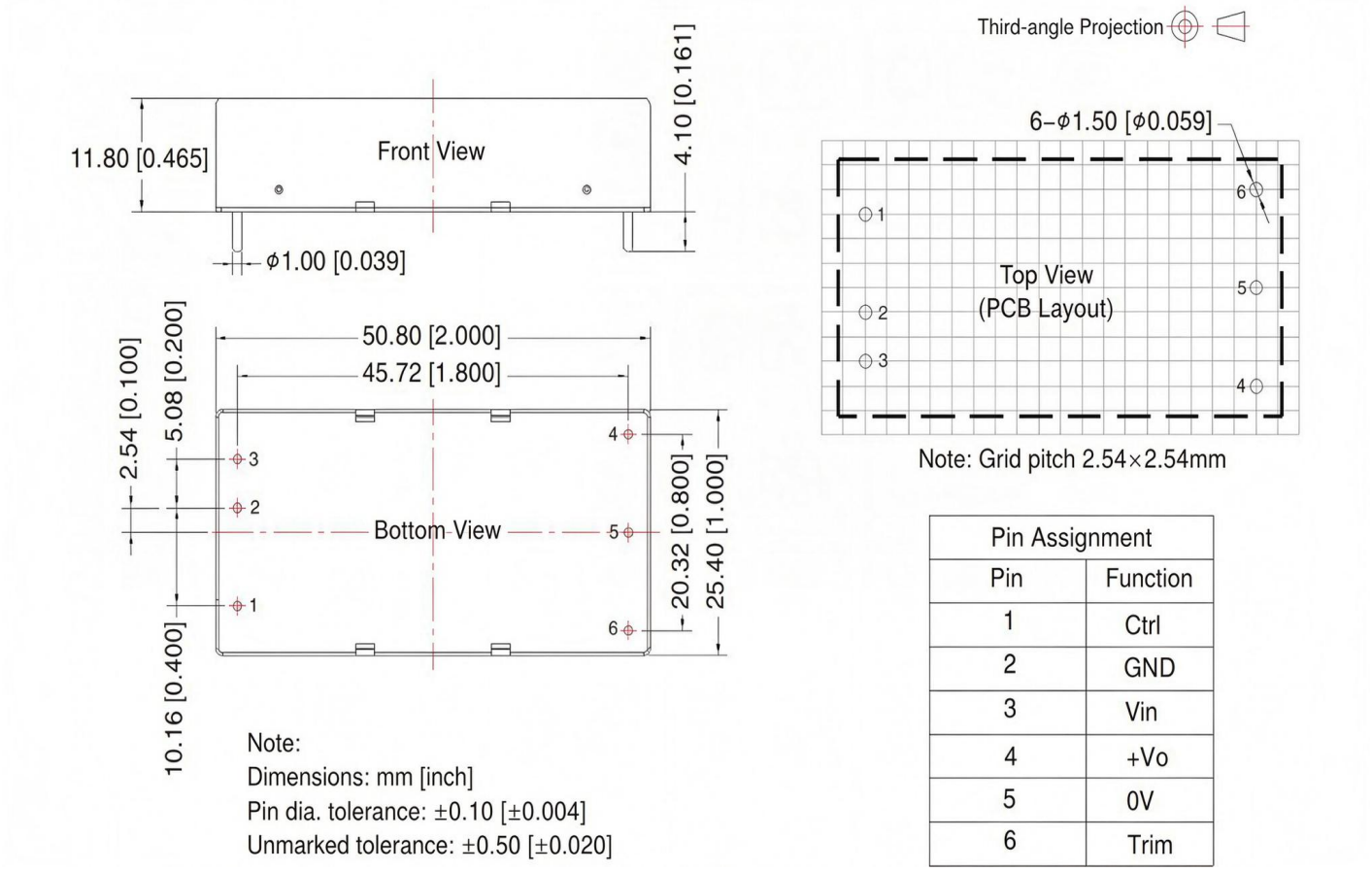

Pin Assignment	
Pin	Function
1	Ctrl
2	GND
3	Vin
4	+Vo
5	0V
6	Trim

GTB_LD-72WR3 Outline Drawing

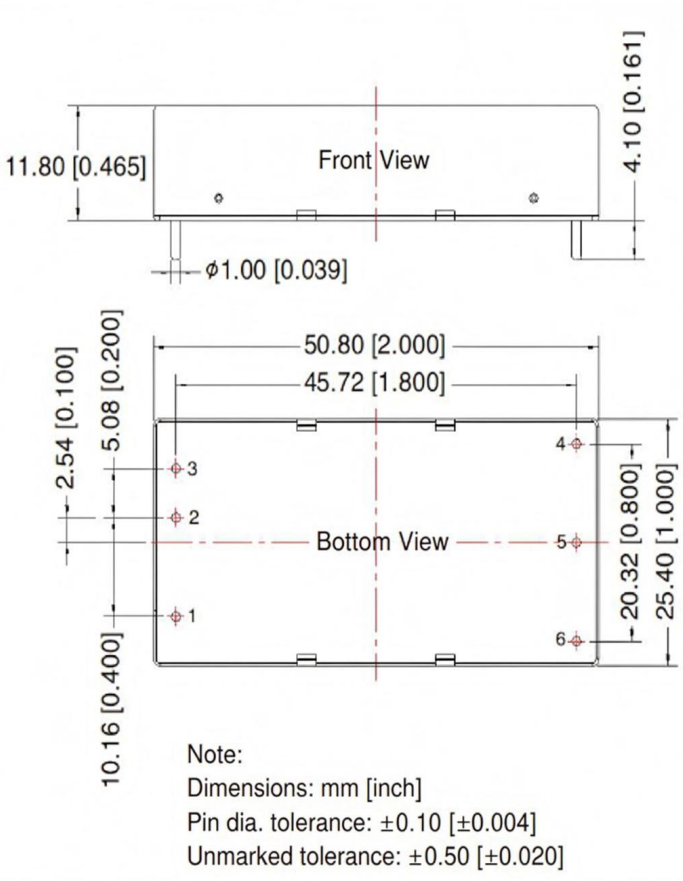

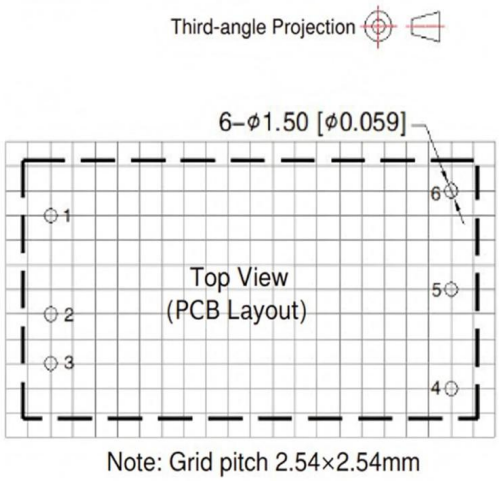

Pin Assignment	
Pin	Function
1	Ctrl
2	GND
3	Vin
4	+Vo
5	0V
6	Trim

Packaging Information

Packing Dimensions (L × W × H)	Full carton	610.0 × 285.0 × 225.0 mm
Packing Method	Tube packaging	9 pcs

Notes:

1. If the product operates below the minimum load value, the product will not be damaged, but it will not meet all performance specifications in this manual.
2. The maximum capacitive load is tested under the input voltage range and full-load conditions.
3. Unless otherwise specified, all specifications in this manual are measured at Ta = 25°C, humidity <75% RH, nominal input voltage, and rated output load.
4. All specification test methods in this manual are based on industry standards.
5. We can provide customized products; please contact our technical personnel for details.