Product Feature

1. Universal Input：85-305VAC / 100-430VDC
2. Operating temperature range：-40℃ - +75℃
3. Isolation:3000VAC
4. The mechanism has input undervoltage protection, output short circuit protection
5. Design meet IEC/EN61558、IEC/EN60335
6. High efficiency, high power density, low ripple coefficient
7. High reliable power management chip solution
8. Industrial grade product design

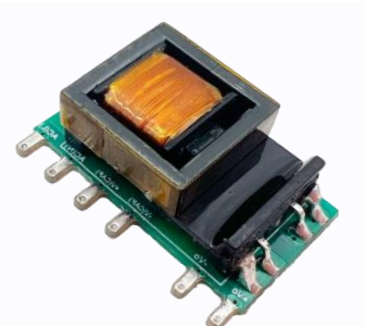

RoHS CE 3 years Warranty

Selection Guide

Part No.	Input Voltage (VAC)	Out Power（W)	Out Voltage (VDC)	Out Current (mA)MAX	Full Load Efficiency %（Typ.）	Capacitive Load(μF) Max.
QO05-13B03R3	85-305	5	3.3	1000	74	1500
QO05-13B05R3		5	5	1000	76	1500
QO05-13B12R3		5	12	420	76	470
QO05-13B15R3		5	15	340	76	330
QO05-13B24R3		5	24	210	76	100

Input Specifications

Item	Operating Conditions	Min.	Typ.	Max.	Unit
Input Voltage	AC Input	85	--	305	VAC
Input Current	300VDC	--	<0.05	--	A
Input Frequency		47	--	63	Hz
Fuse		1A，250V slow-blow, required			
Hot Plug		Unavailable			

Output Specifications

Item	Operating Conditions	Min.	Typ.	Max.	Unit
Output Voltage Accuracy		--	±2	--	%
Linear Regulation		--	±0.5	--	
Load Regulation	10% - 100%load	--	±1.0	--	
Ripple & Noise	20MHz bandwidth	--	1	--	%V
Temperature Coefficient		--	<0.03	--	%/℃

Min. Load		10	--	--	%
Short-Circuit Protection		Continuous, Self-Recovery			

General Specifications

Item	Operating Conditions	Min.	Typ.	Max.	Unit
Isolation Voltage	Input-output, test time 1 minute, leakage current less than 1mA	3000	--	--	VAC
Power Derating		--	3.75	--	%℃
Operating Temperature		-40	--	+75	℃
Storage Temperature		-40	--	+85	
Safety Class		CLASS I			
Switching Frequency		65kHz(typ)			
Withstand voltage	Input-Vo1	4000VAC			
	Input-Vo2	--			
	Vo1-Vo2	--			

Typical Circuit Design And Application

Application circuit

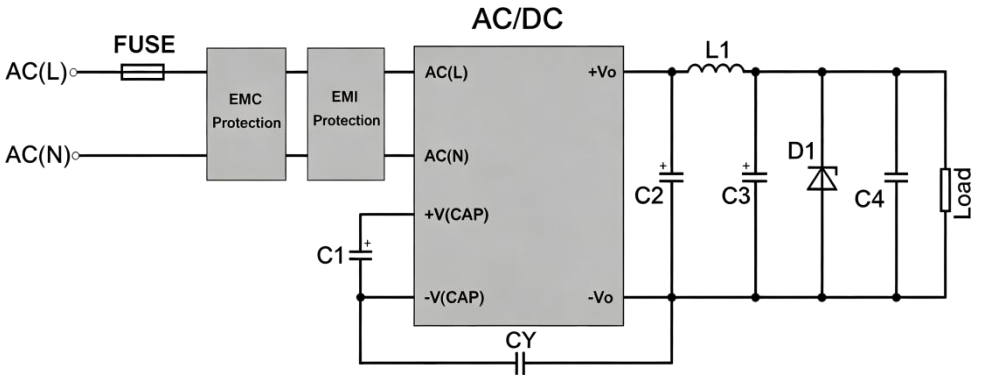

Additional Circuits Design Reference							
Output voltage	C1(required)	C2(required)	L1(required)	C3(required)	C4	CY(required)	D1
3.3/5VDC	10uF/450V	560uF/16V (Solid-state capacitor)	2.2uH 3A 40mΩ MAX	100uF/25V	0.1uF/50V	1nF/400VAC	D1 is a TVS transistor that can protect the downstream circuit in case of module abnormalities. It is recommended to choose a model that is 1.2 times the output voltage
9/12VDC		330uF/25V (Solid-state capacitor)					
15/24VDC		330uF/35V	3.3uH 2A 40mQ MAX	47uF/35V			

EMC Solution — Recommended Circuit

EMC Recommended Circuit

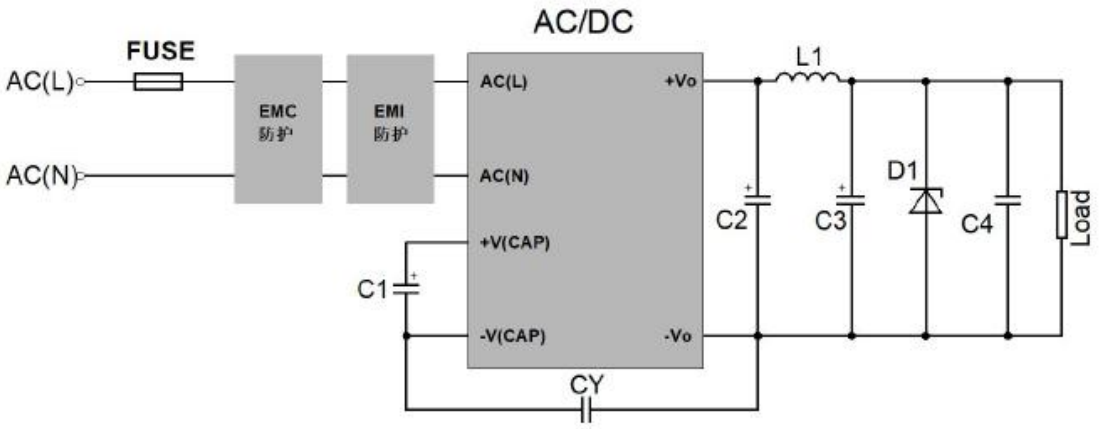

EMC Recommended Circuit Component Selection Reference Table

Component	Parameter
FUSE	2A / 300V, slow-blow type, must be certified
R1	12Ω / 2W, wirewound resistor, must be certified
MOV	14D561
LDM	2.2mH (Max: 4Ω / Min: 0.24Ω)
LCM1	230μH, 0.8A
LCM2	12.6μH / MIN 0.5A
Cx1, Cx2	0.1μF / 310VAC
CY1, CY3, CY4	1nF / 400VAC
Others	Refer to the external component selection reference table

Dimensions and Recommended Layout

Dimensions	PCB Printing Layout

Note:
Unit: mm[inch]
Pin section tolerances:±0.10[±0.004]
General tolerances:±0.50[±0.020]

Grid size：2.54 x 2.54 mm

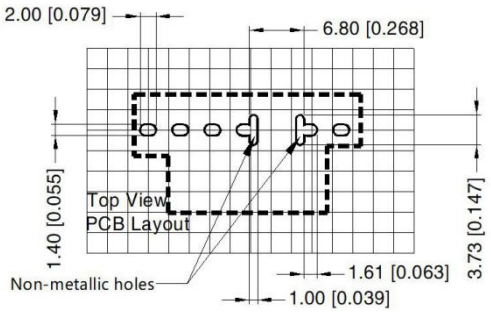

Pin FunctionTable

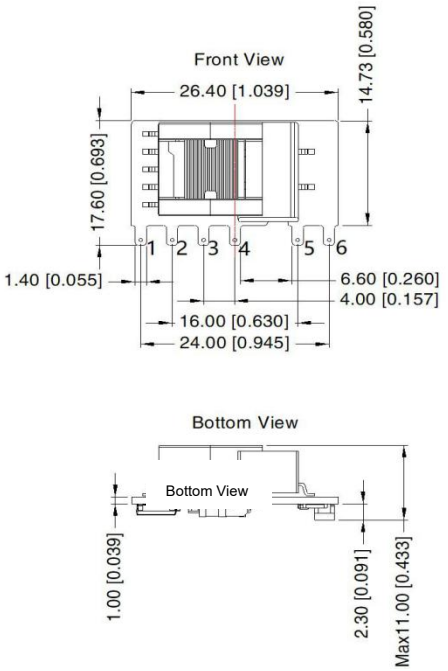

Pin	Function
1	AC(L)
2	AC(N)
3	+V(CAP)
4	-V(CAP)
5	-Vo
6	+Vo

Note:

1. The input voltage cannot exceed the specified range value, otherwise permanent and irreparable damage may be caused;
2. Unless otherwise specified, the parameters in this datasheet were measured at 25°C, humidity 40%~75%, input nominal voltage and output pure resistance mode under full load;
3. All index test methods are based on our company's enterprise standards.