FEATURES



RoHS CE 3 years Warranty

1. Rated power: 1 … 5W Max
2. Universal input: 85~305VAC, 47~63Hz
3. Non-isolated, regulated output
4. Typical efficiency up to 77%
5. Energy saving, standby power only 0.1W typ.
6. Operating temperature range: -40~+85°C
7. RoHS compliance
8. Compact SIP package
9. Over current and short circuit protection
10. Comply to IEC/EN 62368-1, CISPR32, EN55032
11. 3 year warranty

Selection Guide

Model Number	Output Power [W]	Output Voltage [VDC]	Output Current [mA] Max.	Efficiency [% Typ.	Capacitive Load [uF] Max.
QO01-K3B05	1	5	200	60	500
QO03-K3B12	3	12	250	73	330
QO04-K3B12	4	12	330	75	160
QO05-K3B15	5	15	330	76	160
QO05-K3B18	5	18	280	77	160

Electrical Specifications

Parameters	Condition	Min.	Typ.	Max.	Unit
Input voltage range	AC in DC in	85 70	-	305 430	VAC VDC
Input frequency		47	-	63	Hz
Nominal input voltage		100	-	277	VAC
Input current	115VAC 230VAC 277VAC	-	-	0.20 0.14 0.06	A
Inrush current Cold start	115VAC 277VAC	-	25 40	-	A
Output voltage accuracy IOUT=10%~100% of IOUT, rated		-	±5	±8	%
Line regulation Full load		-	±1.5	-	%
Load regulation IOUT=10%~100% of IOUT, rated		-	±3	-	%
Ripple and noise 20MHz bandwidth, peak to peak		-	50	150	mV
Standby power consumption	230VAC	-	0.10	0.40	W
Temperature coefficiency		-	±0.15	-	%/°C
Minimum load		10	-	-	%
Over current protection	Automatic recovery	110	-	-	% IOUT
Short circuit protection	Automatic recovery	Continuous, hiccup mode			
Recommended external fuse		1A, 300V slow blow *required*			

Unless otherwise indicated, specifications are measured at TA=25°C, humidity<75%, nominal input voltage and rated output load.

* Ripple and noise measured at 20MHz of bandwidth by using a 12” twisted pair-wire terminated with a 1uF ceramic capacitor and a 10uF electrolytic capacitor in parallel.

General Specifications

Parameters	Condition	Min.	Typ.	Max.	Unit
Isolation voltage	Input to Output	-	0	-	VAC
Operating temperature range	See "Derating Curve"	-40	-	85	°C
Storage temperature		-40	-	105	°C
Storage humidity		-	-	95	%RH
Soldering temperature	Wave Manual	-	260 360	-	°C
Cooling method		Free air convection			
Safety class		Class II, no FG			
MTBF	MIL-HDBK-217F	>1,000,000 Hours, 25°C			
Design based on standards		IEC/EN/UL 62368-1			
Safety certifications		IEC/EN 62368-1			
EMC		CISPR32, EN55032 Class B with external circuit			
Size, and Weight		16.1 x 15.1 x 9.5 mm, 4.2g			

Typical Characteristic Curve

Output vs Ambient Temperature

QO01-K3Bxx, QO03-K3Bxx

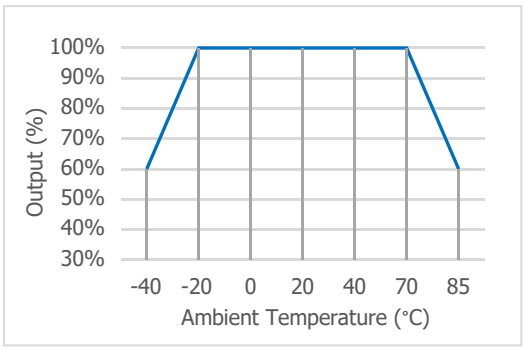

QO04-K3Bxx, QO05-K3Bxx

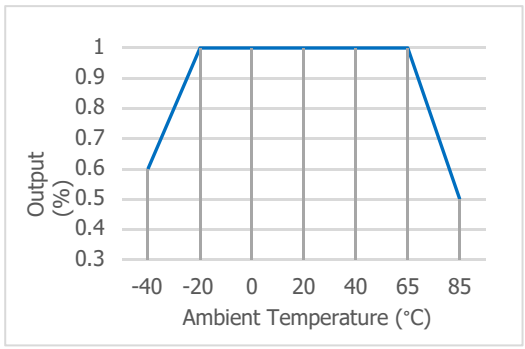

Output vs Input Voltage

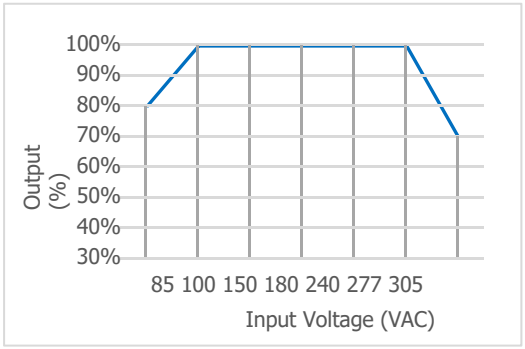

Recommended External Circuits

This circuit is the basic design reference, components with "" are required for the converter's operating.
*FUSE to be 1A, slow blow and is also required for safety.

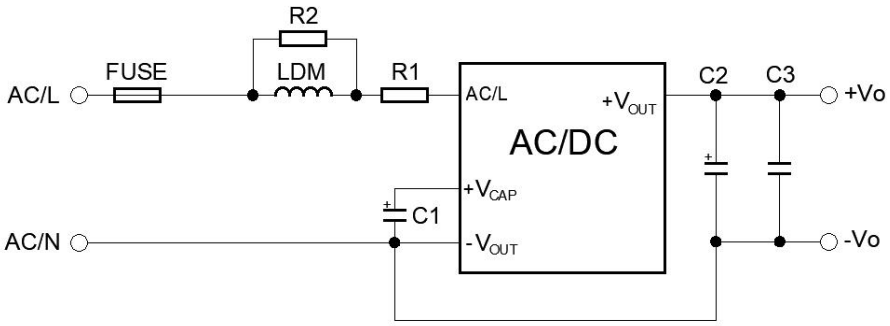

Figure 1. Typical external circuit

Recommended Component Spec [Table 1]

Model Number	LDM*	R1*	R2	C1*	C2*	C3
QO01-K3B05	1.2mH	-	-	22uF, 450V	220uF, 16V	-
QO03-K3B12	1.2mH	-	-	22uF, 450V	220uF, 16V	-
QO04-K3B12	2.2mH	2 Ohm, 2W	8.2KOhm, 0.25W	22uF, 450V	470uF, 35V	0.1uF, 50V
QO05-K3B15	2.2mH	2 Ohm, 2W	8.2KOhm, 0.25W	22uF, 450V	470uF, 35V	0.1uF, 50V
QO05-K3B18	2.2mH	2 Ohm, 2W	8.2KOhm, 0.25W	22uF, 450V	470uF, 35V	0.1uF, 50V

EMC Enhancement for EN55032 Class B

*This application circuit is recommended for EMC enhancement. It is not mandatory if this is not critical in the application.

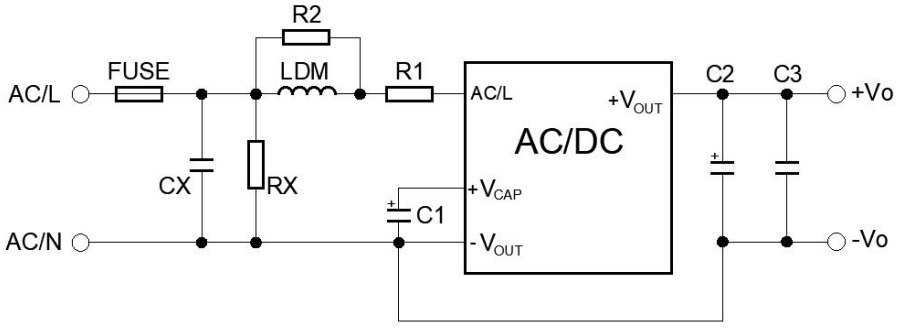

Figure 2. External circuit for EMC enhancement

Recommended Component Spec [Table 2]

Item	CX	RX*
Spec	0.1uF, 310VAC	5M … 8M Ohm

Components above with "" are required for the converter's operating.
*Refer to Table 1 for other components

Dimensions and Recommended Layout

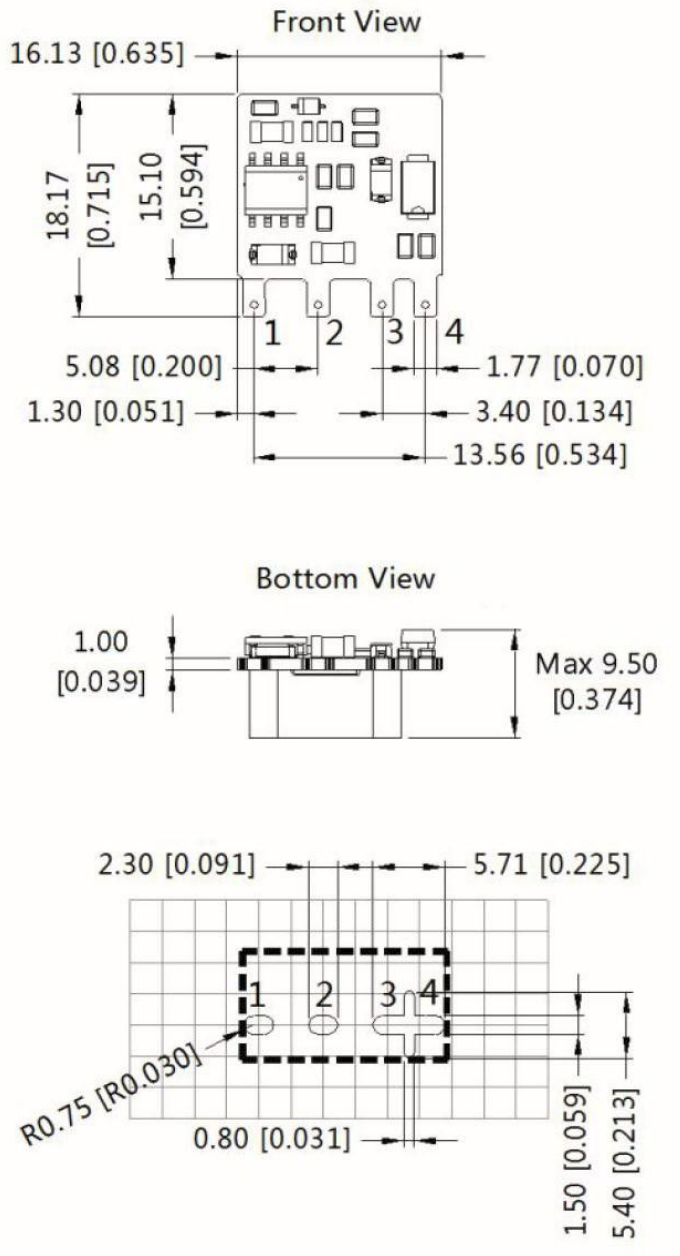

Pin Definition

Pin #	Single Out
1	AC (L)
2	+V (CAP)
3	AC (N) / -V_{OUT}
4	+V_{OUT}

* Unless otherwise specified unit: mm [inch]
* General tolerance: ±1.00 [±0.040]
* Pin thickness: ±0.10 [±0.004]
* Footprint grid 2.54 x 2.54 mm

Notes & Instructions

1. If the product works under the minimum required load, it cannot guarantee that the performance of the product complies with all the performance indicators in this manual;
2. The maximum capacitive load is tested under the input voltage range and full load condition;
3. Unless otherwise stated, all indexes in this manual are measured at Ta=25℃, humidity <75%RH, nominal input voltage and rated output load;
4. All index testing methods in this manual are based on the enterprise standards of the company;
5. Our company can provide product customization, specific needs can directly contact our technical staff;