FEATURES

1. Input voltage range: 90-264VAC
2. Built-in active PFC function
3. Reinforced insulation, isolation voltage 1500VAC
4. Operating temperature range: -20℃ to +70℃
5. Overload/Over voltage/Over temperature protection
6. Compliant with IEC62368 standard
7. 3 years warranty



RoHS CE 3 years Warranty

Description

AMRSP -500 is a 500W single output enclosed type AC/DC power supply. This series operates for 90~264VAC input voltage and offers the models with the DC output mostly demanded from the industry. Each modelis cooled by free air convection, working for the temperature up to 70℃.

Selection Guide

Part No.	Input Voltage Range	Imax（A)	Output Voltage (V)	Output Voltage Adjustment	Noise & Ripple(mV)	Efficiency (%) @Full Load
AMRSP-500-12	90-264 VAC 135-370VDC	35	12	±10%	200	91
AMRSP-500-24		21	24	±10%	200	92.5
AMRSP-500-36		14	36	±10%	280	93
AMRSP-500-48		10.5	48	±10%	300	94

Specifications

Item	Operating Conditions	Min.	Typ.	Max.	Unit
Input Voltage Range		90	--	264	VAC
Frequency Range		47	--	63	Hz
Effciency		91	--	94	%
Power factor	PF≥0.99/115VAC,PF≥0.95/230VAC at full load				
Impact current	Cold start current 40A/230VAC				
AC input current	5.0A/115V 3.0A/230VAC				
Leakage current	<1mA / 240VAC				
DC output voltage		12	--	48	V
Current Range		0	--	35	A
Line Regulation		--	±0.5	--	%
Load Regulation		--	±0.5	±1.0	%
Setup,rise time	800ms,50ms,16ms/230VAC at full load				
Over-Voltage Protection	115%~135%,Hiccup mode, can automatically restore normal output after removing abnormal conditions				
Over-Load Protection	100%-125% ,Hiccup mode, can automatically restore normal output after removing abnormal conditions				
Over-Temperature Protection	Hiccup mode, can automatically recover after the temperature returns to normal	75	--	95	℃
Isolation Voltage		1500	--	--	VAC
Insulation resistance	Input-output resistance at 500VDC	100	--	--	MΩ
Operating Temperature		-20	--	+70	℃
Operating Humidity	Non-condensing	20	--	90	%RH
Storage Temperature		-40	--	+85	%RH
Storage Humidity		10	--	95	%RH
MTBF	MIL-HDBK-217F@25℃	187.9	--	--	K hours
Dimension	215×115×30mm（L*W*H）				
Weight		850	--	--	g
package	20pcs/carton 18.5kg/carton				

Block Diagram

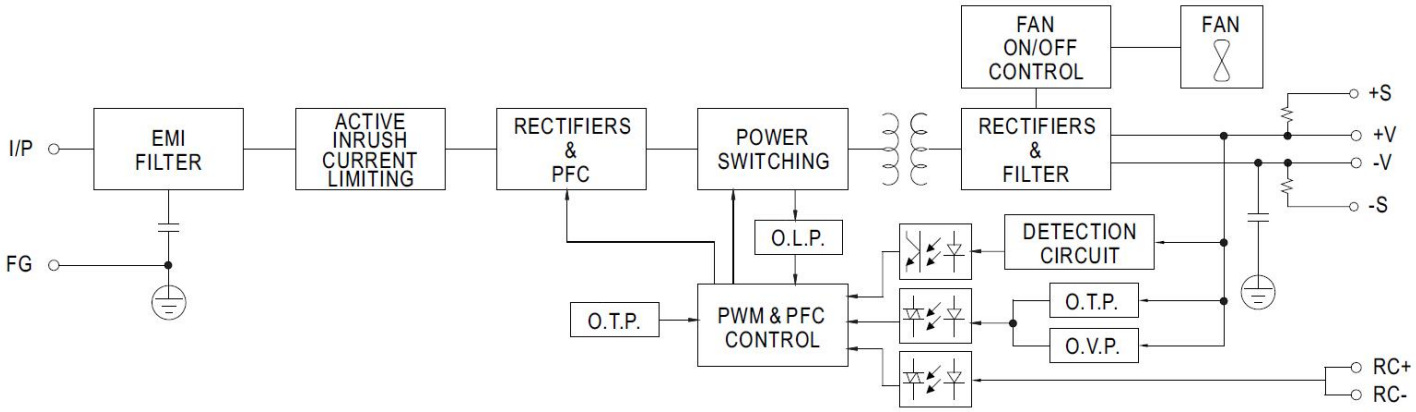

Product characteristic curve

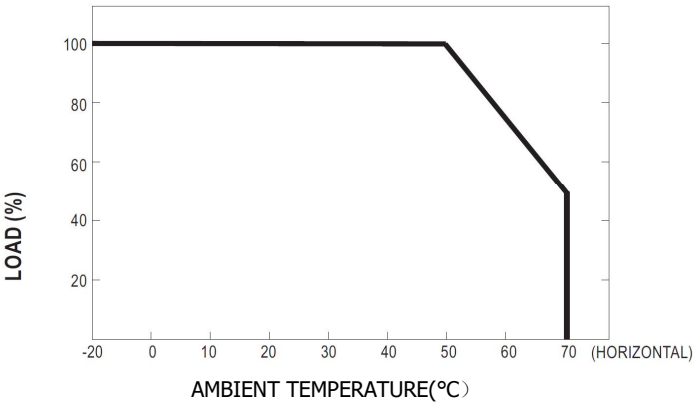

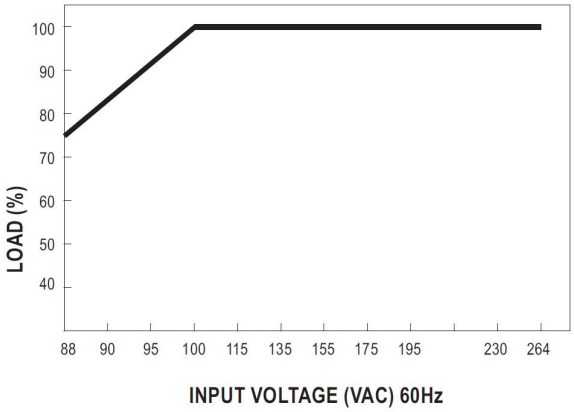

Product Dimensions

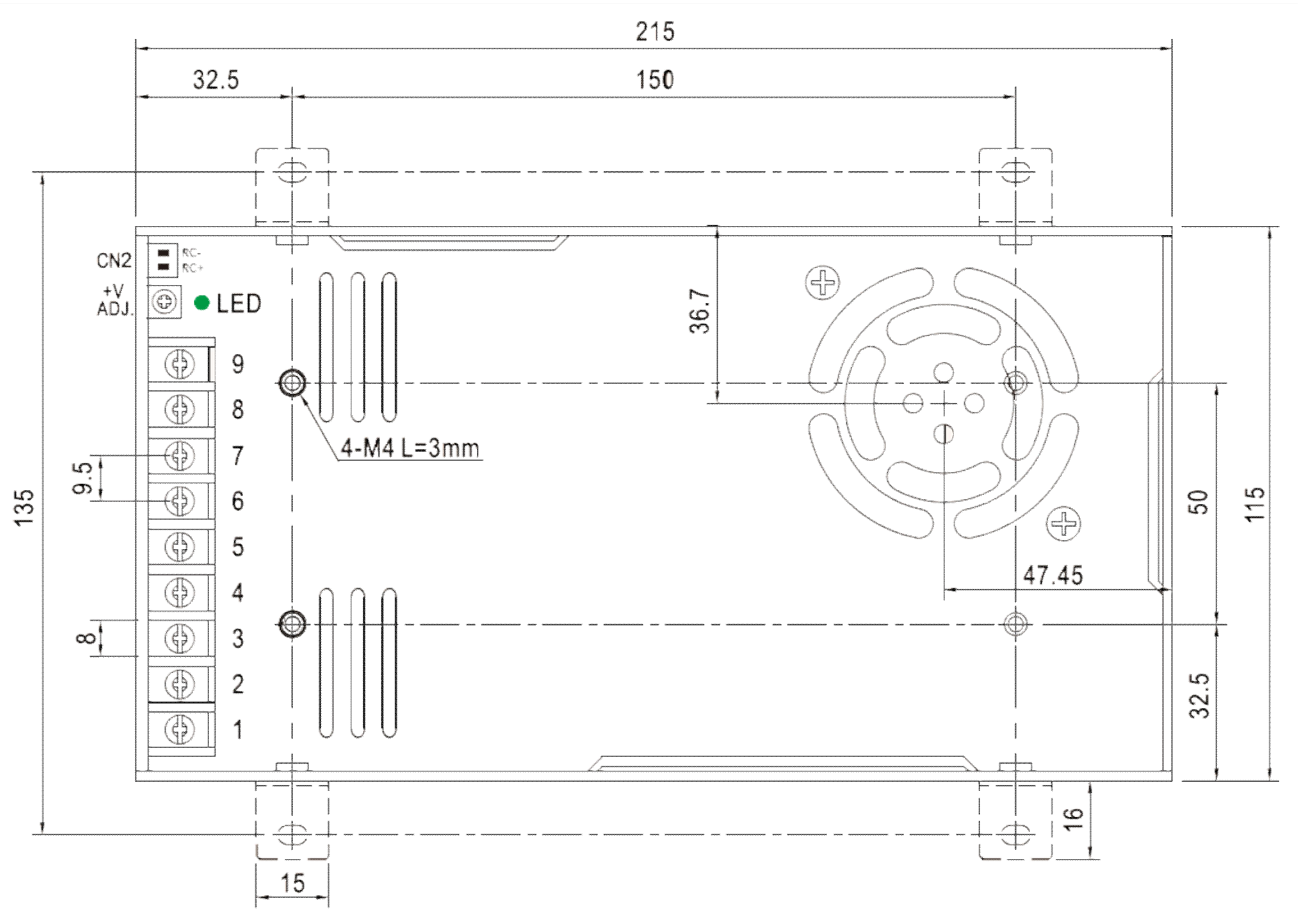

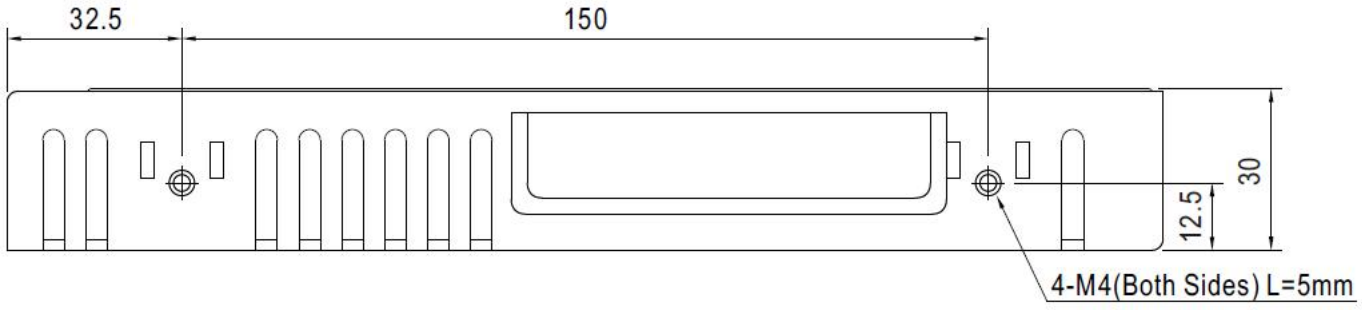

Terminal Pin No. Assignment:

Pin No.	Assignment	Pin No.	Assignment
1	AC/L	4,5,6	DC Output -V
2	AC/N	7,8,9	DC Output +V
3	FG ⏚		

CN2	RC-	Return for RC+ signal input
	RC+	Power on/off controlled by an electronic switch or a dry contact between pin 4 (RC+) and pin 3 (RC-). 0~0.8V: Power ON, 4~10V: Power OFF