FEATURES

1. Input voltage range: 90-264VAC
2. Built-in active PFC function
3. Reinforced insulation, isolation voltage 2500VAC
4. Operating temperature range: -40℃ to +70℃
5. Overload/Over voltage/Over temperature protection
6. Compliant with IEC62368 standard
7. 3 years warranty



RoHS CE 3 years Warranty

Description

AMRSP-150 is a 150W single output enclosed type AC/DC power supply. This series operates for 90~264VACinput voltage and offers the models with the DC output mostly demanded from the industry. Each modelis cooled by free air convection, working for the temperature up to 70℃.

Selection Guide

Part No.	Input Voltage Range	Imax（A)	Output Voltage (V)	Output Voltage Adjustment	Noise & Ripple (mV)	Efficiency (%) @Full Load
AMRSP-150-24	90-264 VAC 135-370VDC	6	24	±10%	180	91
AMRSP-150-36		4.1	36	±10%	200	91.5
AMRSP-150-48		3.1	48	±10%	280	92
AMRSP-150-60		2.5	60	±10%	300	93

Specifications

Item	Operating Conditions	Min.	Typ.	Max.	Unit
Input Voltage Range		90	--	264	VAC
Frequency Range		47	--	63	Hz
Effciency		91	--	93	%
Power factor	PF≥0.99/115VAC,PF≥0.95/230VAC at full load				
Impact current	Cold start current 35A/230VAC				
AC input current	1.6A/115V 0.8A/230VAC				
Leakage current	<1mA / 240VAC				
DC output voltage		24	--	60	V
Current Range		0	--	6	A
Line Regulation		--	±0.5	--	%
Load Regulation		--	±0.5	±1.0	%
Ripple & Noise	20MHz bandwidth	--	180	300	mVp-p
Setup,rise time	800ms,50ms,16ms/230VAC at full load				
Over-Voltage Protection	115%~135%,Voltage limiting mode, which can automatically restore normal output after removing abnormal conditions				
Over-Load Protection	105%-125% ,Current limiting mode, automatically restores normal output after abnormal conditions are removed				
Over-Temperature Protection	current reduction mode, can automatically recover after the temperature returns to normal	85	--	105	℃
Isolation Voltage		2500	--	--	VAC
Insulation resistance	Input-output resistance at 500VDC	100	--	--	MΩ
Operating Temperature		-40	--	+70	℃
Operating Humidity	Non-condensing	20	--	90	%RH
Storage Temperature		-40	--	+85	%RH
Storage Humidity		10	--	95	%RH
MTBF	MIL-HDBK-217F@25℃	290.7	--	--	K hours
Dimension	129×97×30mm（L*W*H）				
Weight		300	--	--	g
package	20pcs/carton 16.5kg/carton				

Block Diagram

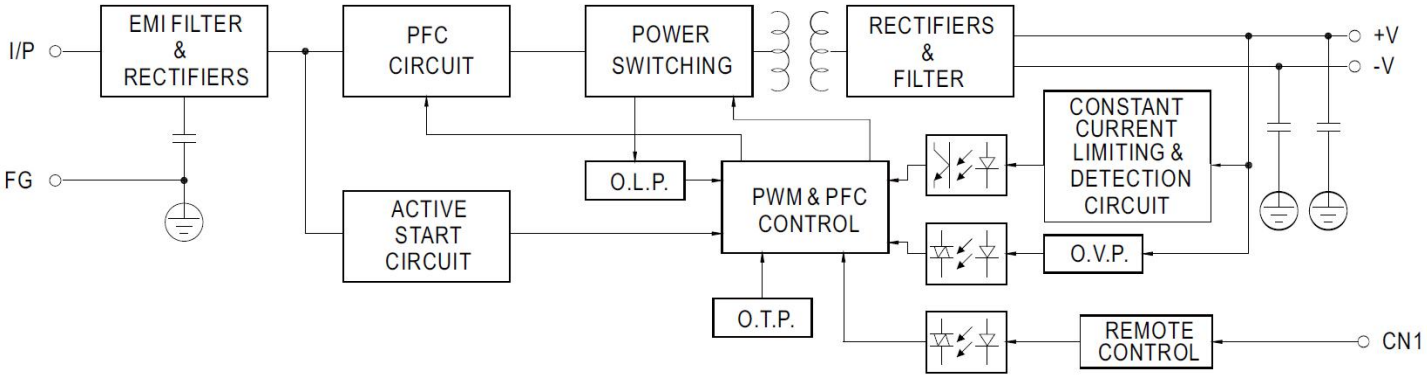

Product characteristic curve

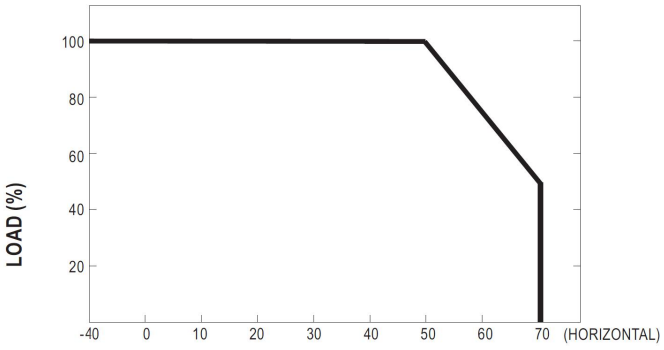

AMBIENT TEMPERATURE(℃)

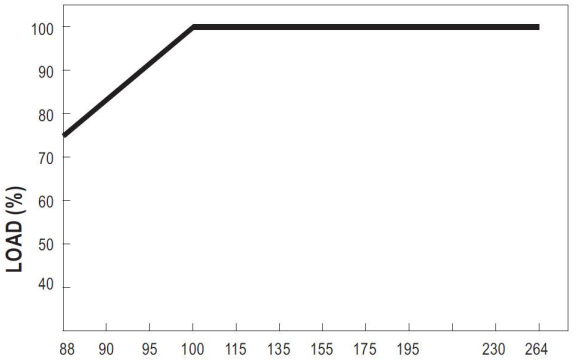

INPUT VOLTAGE (VAC) 60Hz

Product Dimensions

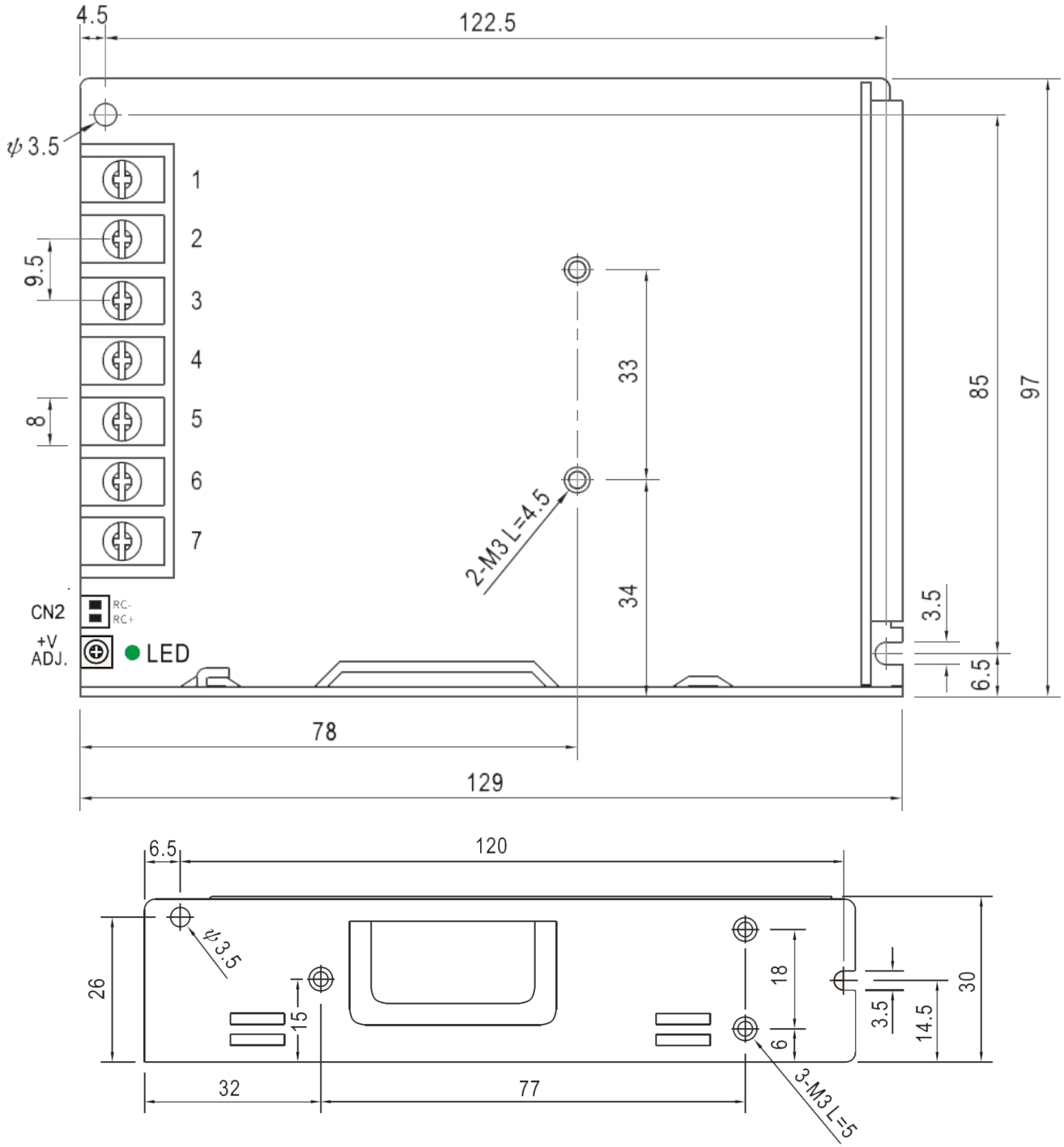

Terminal Pin No. Assignment:

Pin No.	Assignment	Pin No.	Assignment
1	AC/L	4,5	DC Output -V
2	AC/N	6,7	DC Output +V
3	FG ⏚		

CN2	RC-	Return for RC+ signal input
	RC+	Power on/off controlled by an electronic switch or a dry contact between pin 4 (RC+) and pin 3 (RC-). 0~0.8V: Power ON, 4~10V: Power OFF